CAUTION! DANGEROUS HIGH VOLTAGES PRESENT!

Refer all service and repair to a qualified technician!
The information provided here is intended to be a general guide to the layout and circuit values for the model indicated and is subject to change without notice!

All uf value capacitors Sprague 716P 600v "Orange Drops" except as noted
All pf value capacitors 500v Silver Mica
All 50v capacitors Spargue TVA "Atom"

All power supply resistors 2 watt metal film
All power tube grid resistors 2 watt metal film
All power tube screen resistors 3 watt metal film
All plate & cathode resistors 1 watt metal film
All preamp grid resistors 1/2 watt 1%
All signal path resistors 1/2 watt 5% carbon comp

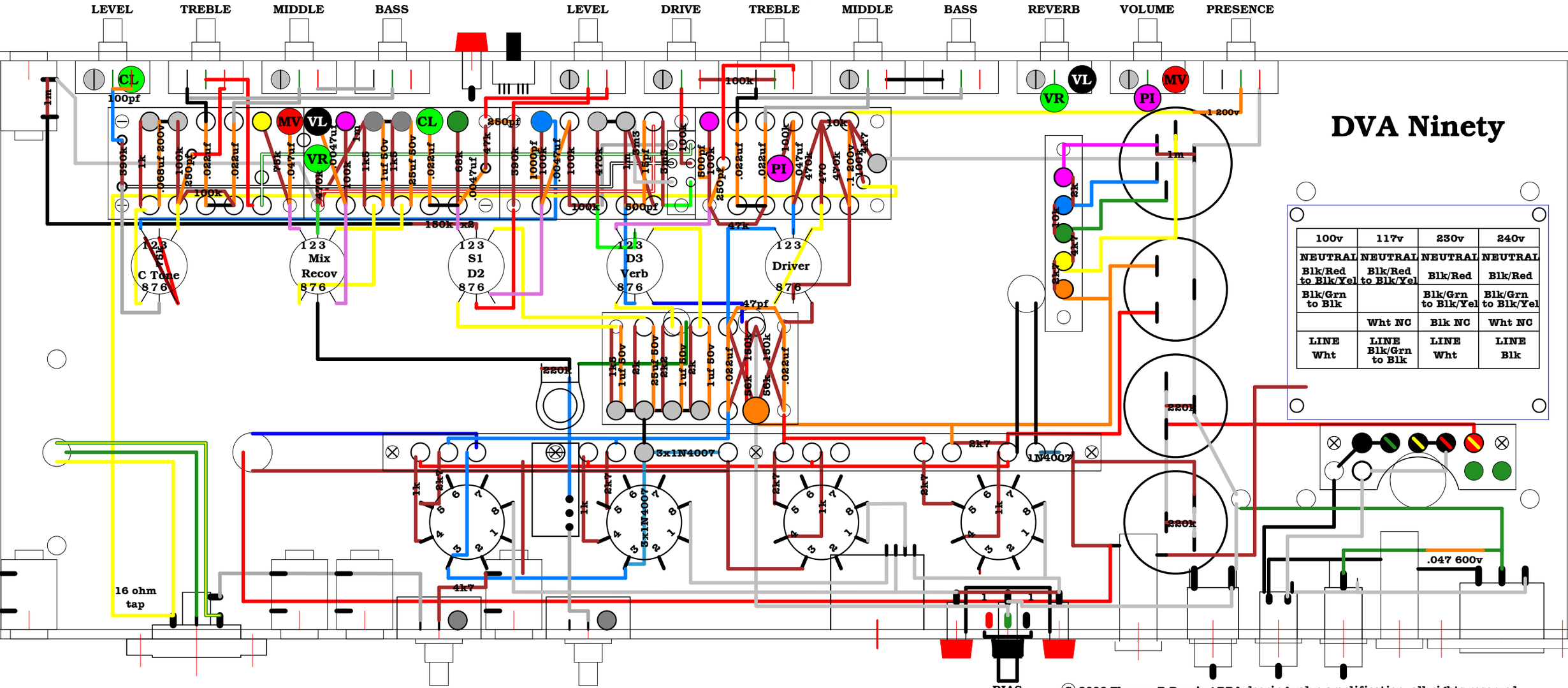

100v	117v	230v	240v
NEUTRAL	NEUTRAL	NEUTRAL	NEUTRAL
Blk/Red to Blk/Yel	Blk/Red to Blk/Yel	Blk/Red	Blk/Red
Blk/Grn to Blk		Blk/Grn to Blk/Yel	Blk/Grn to Blk/Yel
	Wht NC	Blk NC	Wht NC
LINE Wht	LINE Blk/Grn to Blk	LINE Wht	LINE Blk

© 2006 Thomas R Deering DBA deering valve amplification, all rights reserved.
May not be reprocuced or published without written permission.