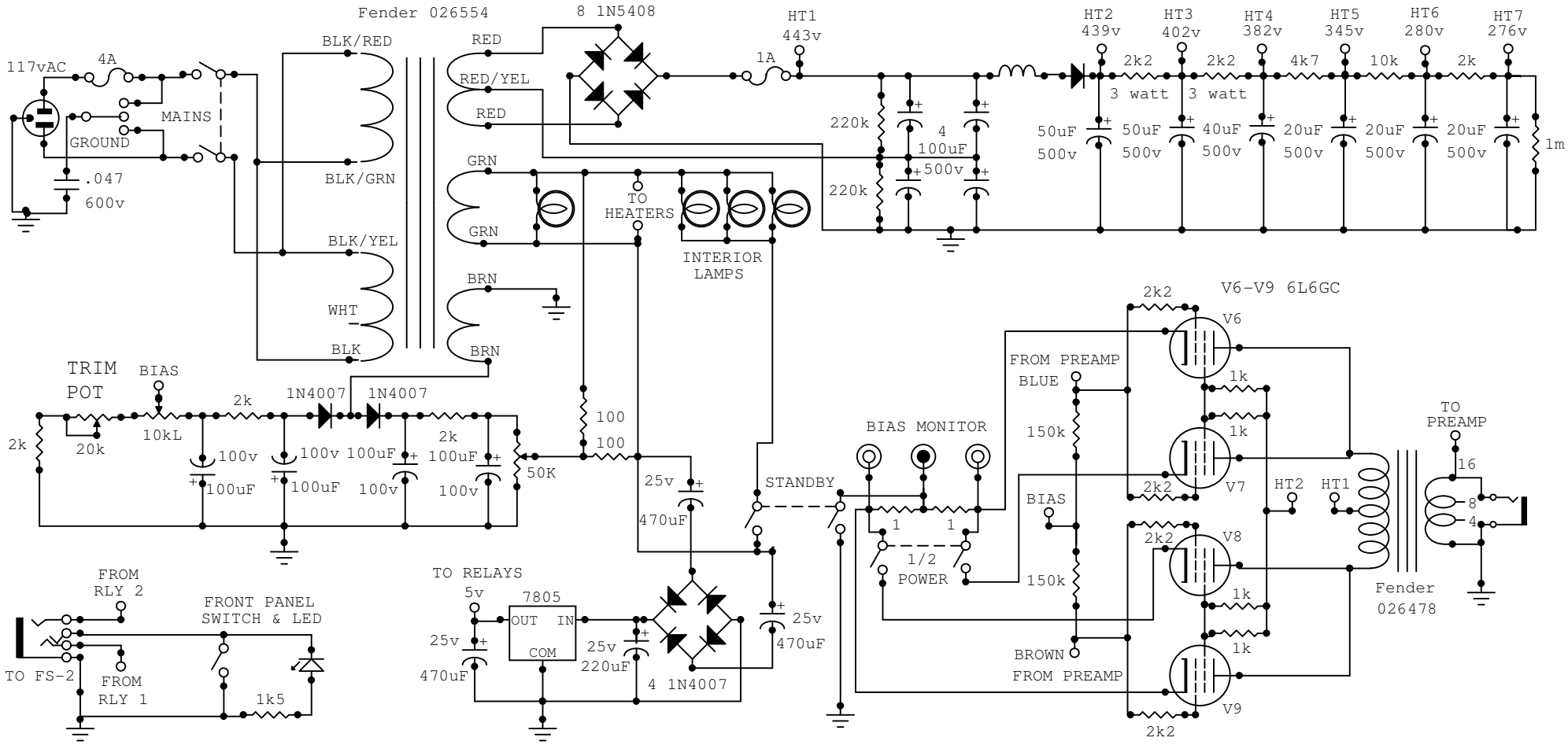

DVA FOOTSWITCH FS-2

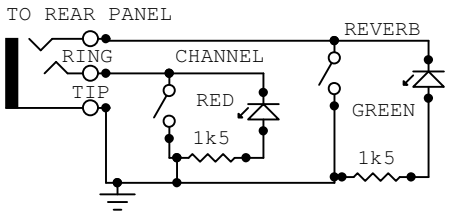

ALL RESISTORS 2 WATT METAL EXCEPT AS NOTED
3 WATT SCREENS
POWER SUPPLY CAPS; LCR, F&T, JJ,OR EQUIVALENT
BIAS & SWITCHING SUPPLY CAPS; NICHICON MUSE

DVA NINETY POWER AMP AND POWER, BIAS & SWITCHING SUPPLY SERIAL # 009 & 010	
Rev	ID
Date:	Page: 1 of 1